2-Color Indication Type Solid State Auto Switch Direct Mounting Style
D-Y7NW(V)/D-Y7PW(V)/D-Y7BW(V)

Refer to SMC website for the details of the products conforming to the international standards.

Grommet

- **The proper operating range can be determined by the color of the light. (Red → Green ← Red)**
- **Using flexible cable as standard spec.**

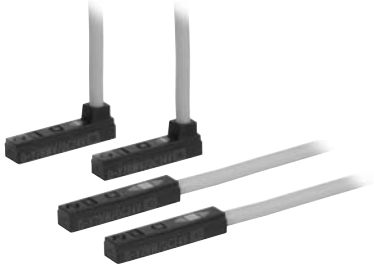

Auto Switch Internal Circuit

D-Y7NW, Y7NWV

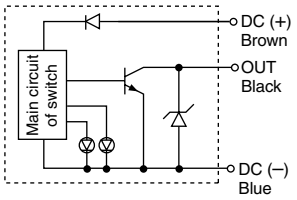

D-Y7PW, Y7PWV

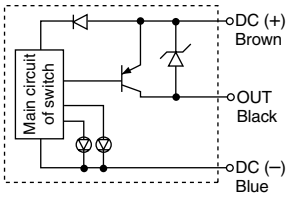

D-Y7BW, Y7BWV

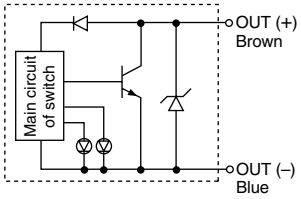

Indicator light/Display method

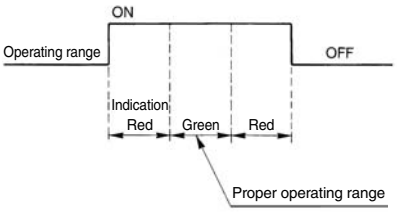

Auto Switch Specifications

PLC: Programmable Logic Controller

D-Y7□W, D-Y7□WV (With indicator light)						
Auto switch model	D-Y7NW	D-Y7NWV	D-Y7PW	D-Y7PWV	D-Y7BW	D-Y7BWV
Electrical entry direction	In-line	Perpendicular	In-line	Perpendicular	In-line	Perpendicular
Wiring type	3-wire				2-wire	
Output type	NPN		PNP		—	
Applicable load	IC circuit, Relay, PLC				24 VDC relay, PLC	
Power supply voltage	5, 12, 24 VDC (4.5 to 28 VDC)				—	
Current consumption	10 mA or less				—	
Load voltage	28 VDC or less		—		24 VDC (10 to 28 VDC)	
Load current	40 mA or less		80 mA or less		2.5 to 40 mA	
Internal voltage drop	1.5 V or less (0.8 V or less at 10 mA load current)		0.8 V or less		4 V or less	
Leakage current	100 μA or less at 24 VDC				0.8 mA or less at 24 VDC	
Indicator light	Operating range ····· Red LED illuminates. Proper operating range ····· Green LED illuminates.					
Standard	CE marking					

• Lead wires — Oilproof flexible heavy-duty vinyl cord, ø3.4, 0.15 mm², 3 cores (Brown, Black, Blue), 2 cores (Brown, Blue), 0.5 m

Note 1) Refer to page 1272 for solid state auto switch common specifications.

Note 2) Refer to page 1272 for lead wire lengths.

Mass

(g)

Auto switch model		D-Y7NW(V)	D-Y7PW(V)	D-Y7BW(V)
Lead wire length (m)	0.5	11	11	11
	3	54	54	54
	5	88	88	88

Dimensions

(mm)

D-Y7□W

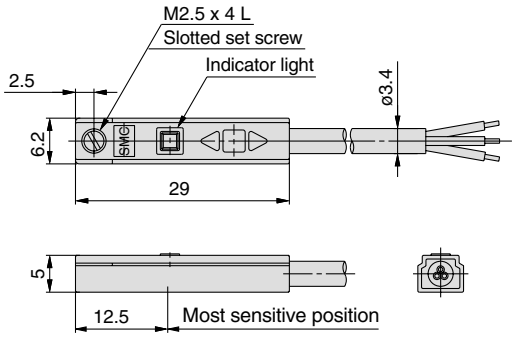
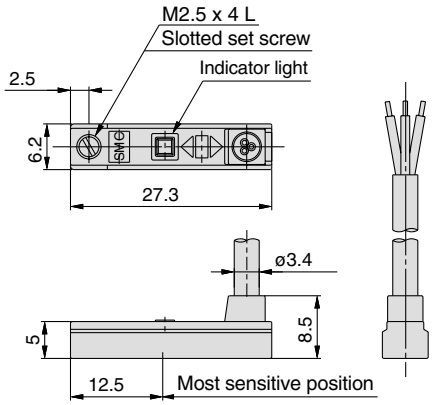
D-Y7□WV