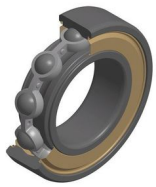

Technical data

6812ZZ/5K

Single row deep groove ball bearings

Deep groove ball bearing, radial contact, pressed steel cage, shields on both sides

Visual(s)

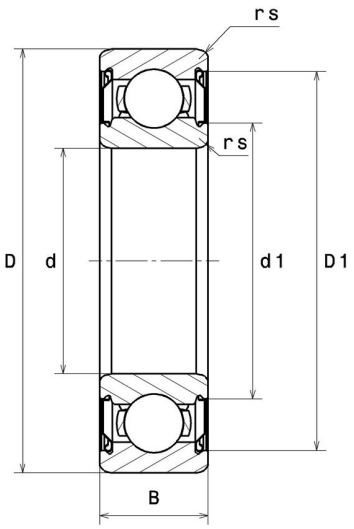

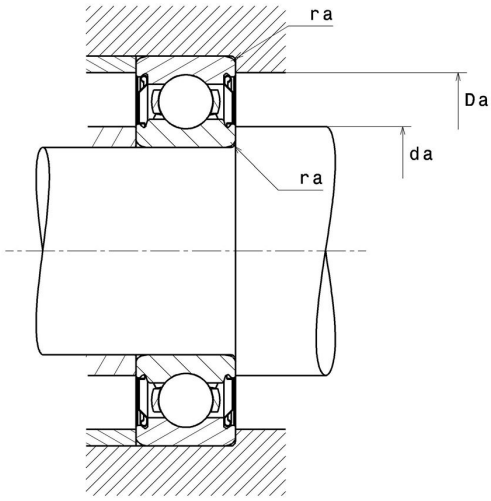

Product definition

d	60 mm
D	78 mm
B	10 mm
rs min	0.3 mm
Radial clearance class	CN
Mass	0.11 kg
Brand	NTN

Product performance

Dynamic load, C	11.5 kN
Static load, C0	10.6 kN
Fatigue limit load, Cu	0.48 kN
f0	16.3
Nlim (grease)	8,000 Tr/min
Min operating temperature, Tmin	-20 °C
Max operating temperature, Tmax	120 °C
Characteristic cage frequency, FTF	0.46 Hz
Characteristic rolling element frequency, BSF	12.34 Hz
Characteristic outer ring frequency, BPF0	9.66 Hz
Characteristic inner ring frequency, BPFI	11.35 Hz

Abutment dimensions

da min	62 mm
Da max	76 mm
ra max	0.3 mm

Calculation factors

Equivalent dynamic radial load

P = X.Fr + Y.Fa

$\frac{f_0 F_a}{C_0}$	e	Fa / Fr ≤ e		Fa / Fr > e	
		X	Y	X	Y
0.172	0.19	1	0	0.56	2.3
0.345	0.22				1.99
0.689	0.26				1.71
1.03	0.28				1.55
1.38	0.3				1.45
2.07	0.34				1.31
3.45	0.38				1.15
5.17	0.42				1.04
6.89	0.44				1

Equivalent static radial load

Po = Xo.Fr + Yo.Fa

X_0	Y_0
0.6	0.5

For single or DT bearing arrangement :

If Po <Fr, then use Po = Fr