SAVAGE A40

Professional automatic welding helmet



The SAVAGE A40 helmet has been designed to meet the needs of a variety of welders, providing a high tech lightweight shell to protect from heat, sparks and spatter. Utilising the latest ADF technology, the welding lens gives a high clarity of view with True Color, resulting in an excellent optical quality. The SAVAGE A40 helmet provides ideal functionality, performance and comfort to the occasional welder, maintenance and construction workers through to the professional welder.

- External shade adjustment between DIN 9 and DIN 13 and an optical class of 1/1/1/2. Delay and sensitivity can be adjusted from the inside
- Four arc sensors for higher auto darkening response
- Wider coverage and a larger viewing area of 3.93 x 1.96 in. (100 x 50 mm) that offers a wide field of vision and increased spatial awareness
- Sensitivity control is an adaptable feature useful when welding low amp TIG for better reaction to darker arc light
- Delay control enabling the welder to set how long the lens stays dark after the welding arc stops. Short delay helps get the job done faster during tack welding, whilst longer delay is useful for high amperage welding
- Externally activated Grind Button. Shade 4 Grind Mode
- True Color allowing for a brighter view and enhanced colour definition

Visit **esab.com** for more information.

Welding Process

- Oxy-Fuel Cutting
- Plasma Cutting
- Grinding
- Welding, GMAW (MIG/MAG)
- Welding, GTAW (TIG)
- Welding, PAW -Plasma Arc Welding
- Welding, SMAW/MMA (Stick)

SAVAGE A40

Specifications	
Cartridge Dimensions	4.33 x 3.54 x 0.3 in. (110 x 90 x 7.8 mm)
Viewing Area	3.93 x 1.96 in. (100 x 50 mm)
Lens Shade	DIN 4, 9-13 Automatic
Power Supply	Solar cell, replaceable battery (1*CR2450 lithium). Alerts when low battery.
Sensors	4
Switch Time, from Dark to Light	0.1-0.9 s
Switch Time, at 23° C	0.07 ms
Classification	1/1/1/2
Standards	CE EN379 and EN175, ANSI , CSA, AS/NZS
Weight	500 g (1.1 lbs.)

Ordering Information	
Savage A40 9-13 Black	0700000490
Savage A40 9-13 Yellow	0700000491

Wear and Spare Parts		
1	Head Gear	0700000483
2	Sweat Band	0700000414
3	Front Cover Lens	0700000010
4	Inside Cover Lens	0700000482
5	ADF Cradle	0700000418
6	Lens Retainer with Screw	0700000419
	Magnifying Lens +1.0 Diopter	0700000084
	Magnifying Lens +1.5 Diopter	0700000085
	Magnifying Lens +2.0 Diopter	0700000086
	Magnifying Lens +2.5 Diopter	0700000087
	Leather Chest Protection	0700000062
	Leather Head/Neck Protection	0700000063
	Proban Hood	0000593269

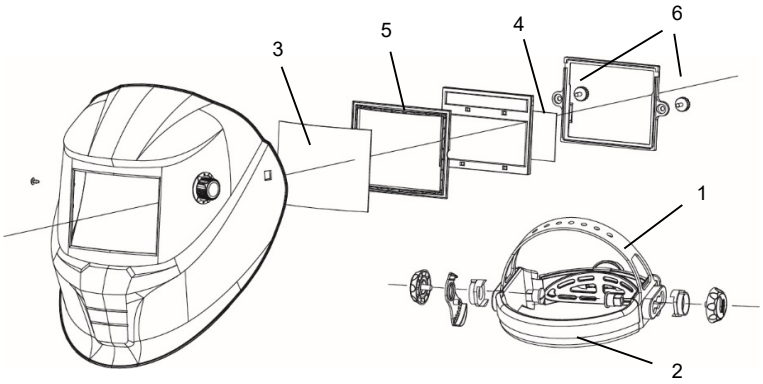

ESAB / esab.com

GLOBALLY CERTIFIED MANAGEMENT SYSTEMS

XA00207921 09/2020 ESAB reserves the right to alter specifications without prior notice.