www.mecalineparts.com

DATASHEET

THREE PHASE INDUCTION MOTOR - SQUIRREL CAGE

IE4

Type : 4EL160M2D-FC-BA-C34 RE: 894261 **Date** : 03.01.2022

Power [kW]	: 15.0	Efficiency Class	: IE4
Input Voltage [V]	: 400	Duty Cycle	: S1
Connection Type [Δ / Y]	: Δ	Service Factor	: 1.25
Frequency [Hz]	: 50	Frame Size	: 160M
Pole Number	: 2	Weight [kg]	: 95.0
Nominal Speed [rpm]	: 2950	Insulation Class	: F [155°C]
Nominal Current [A]	: 25.6	Temperature Rise	: B [80˚K]
Nominal Moment [Nm]	: 48.6	Protection Class	: IP55
Nominal Efficiency [η]	: 93.3	Vibration Severity Grade	: A
Power Factor [cosφ]	: 0.91	Method of Cooling	: IC411
Locked Rotor Current [Ia/In]	: 8.5	Direction of Rotation	: Bidirectional
Locked Rotor Torque [Ma/Mn]	: 3.3	Balance	: Half Key
Breakdown Torque [Mk/Mn]	: 4.3	Motor Protection	: PTC
Motor Color	: RAL 7031	Altitude Above Sea Level	: 1000m
Ambient Temperature	: -15°C / +40°C	Sound Pressure Level [dBA]	: 74

ELECTRICAL DATA

Δ / Y	U [V]	f [Hz]	P [kW]	n [rpm]	I [A]	η [%]	Cosφ
Δ	400	50	15.0	2950	25.6	93.3	0.91
Y	690	50	15.0	2950	14.8	93.3	0.91
Δ	460	60	17.4	3540	25.5	93.0	0.92

MECHANICAL DATA

Moment of Inertia [kgm^2]	: 0.04409
Bearing DS / NS	: 6309ZZ / 6209ZZ
Frame Material	: Aluminum
Flange Type / Material	: B14 / Aluminum
Cooling Fan Material	: Plastic
End Shield Material	: Aluminum

TERMINAL BOX

Terminal Box Material	: Aluminum
Terminal Box Position	: Top
Terminal Box Cable Entry	: 2xM32x1.5
Terminal Box Blind Cap	: --
Contact Screw Thread	: M6

MECHANICAL DIMENSIONS

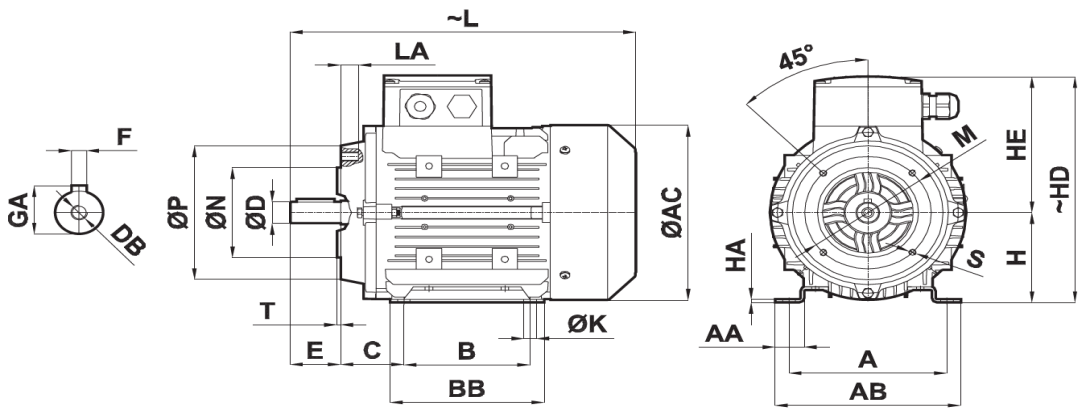

FLANGE TYPE	D	N	P	E	T	LA	L	AC	S	M	H	HE	HD	F	GA	DB	C	ØK	B	BB	HA	AA	A	AB
B14	42	180	250	110	4	23	605	316	M12	215	160	224	384	12	45	M16	108	14.5	210	323	15	65	254	295

Manufactured and tested in accordance with IEC 60034

FR.AG.010 REV. NO: 03 REV TARİHİ : 01.01.2021

*Technical data are subject to change! There may be discrepancies between calculated and rating plate values.

*MECALINE has right to change all the data without prior notice.

Rubix Engineering
61 Avenue Tony
Garnier, 69007,
France