# S90AD16E

## SCHULTERFRÄSEN UND NUTFRÄSEN
## SQUARE SHOULDER AND SLOT MILLING CUTTERS

| | | | |
|---|---|---|---|
| $\gamma_p$ | +10,5° – 12° | $\kappa_r$ | 90° |
| $\gamma_f$ | -3,8° – -8,2° | $a_{p\,max}$ | 13 mm |

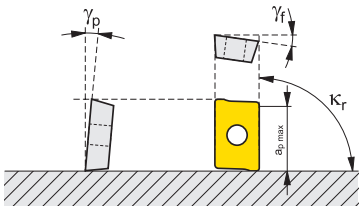


**FORCE** *AD*

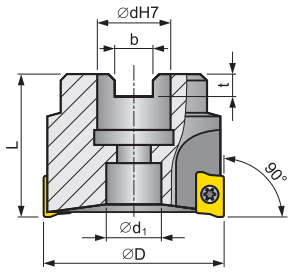


ø 40 - 125 mm

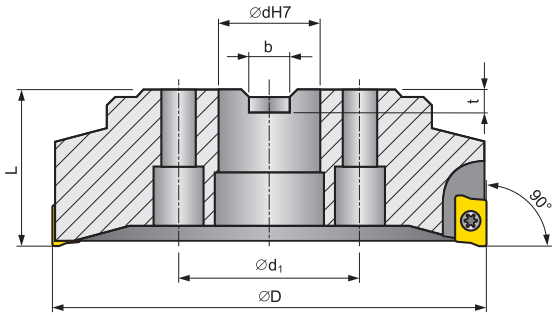


ø 160 mm

Z* - Anzahl Zähne / Number of teeth

Abmessungen [mm]. / Dimensions [mm].

| ISO | Sortiment / Assortment | Abmessungen / Dimensions D | dH7 | $d_1$ | L | b | t | Z* | | | | | Kühlung Cooling | [kg] |
|---|---|---|---|---|---|---|---|---|---|---|---|---|---|---|
| 40A04R-S90AD16E-C | ● | 40 | 16 | 14 | 40 | 8,4 | 5,6 | 4 | | | | | + | 0,20 |
| 50A03R-S90AD16E-C | ● | 50 | 22 | 18 | 40 | 10,4 | 6,3 | 3 | | | | | + | 0,30 |
| 50A05R-S90AD16E-C | ● | 50 | 22 | 18 | 40 | 10,4 | 6,3 | 5 | | | | | + | 0,30 |
| 63A04R-S90AD16E-C | ● | 63 | 22 | 18 | 40 | 10,4 | 6,3 | 4 | | | | | + | 0,50 |
| 63A06R-S90AD16E-C | ● | 63 | 22 | 18 | 40 | 10,4 | 6,3 | 6 | | | | | + | 0,50 |
| 80A05R-S90AD16E-C | ● | 80 | 27 | 38 | 50 | 12,4 | 7,0 | 5 | | | | | + | 1,00 |
| 80A07R-S90AD16E-C | ● | 80 | 27 | 38 | 50 | 12,4 | 7,0 | 7 | | | | | + | 1,00 |
| 100A06R-S90AD16E-C | ● | 100 | 32 | 45 | 50 | 14,4 | 8,0 | 6 | | | | | + | 1,80 |
| 100A08R-S90AD16E-C | ● | 100 | 32 | 45 | 50 | 14,4 | 8,0 | 8 | | | | | + | 1,70 |
| 125A09R-S90AD16E-C | ● | 125 | 40 | 56 | 63 | 16,4 | 9,0 | 9 | | | | | + | 3,50 |
| 160C10R-S90AD16E | ● | 160 | 40 | 66,7 | 63 | 16,4 | 9,0 | 10 | | | | | | 5,70 |

PRAMET

● Lagersortiment / ○ Kein Lagersortiment, ■ Lagersortiment ab 1.04.2014 / □ Kein Lagersortiment ab 1.04.2014
● stocked as standard / ○ not stocked as standard, ■ stocked as standard from 1.4.2014 / □ not stocked as standard from 1.4.2014
Derzeitiges Lagerbestandssortiment ist abhängig von der gültigen Preisliste. / See price list for current availability.