S90LN12

SCHULTERFRÄSEN UND NUTFRÄSEN
SQUARE SHOULDER AND SLOT MILLING CUTTERS (4 CUTTING EDGES)

ECON *LN*

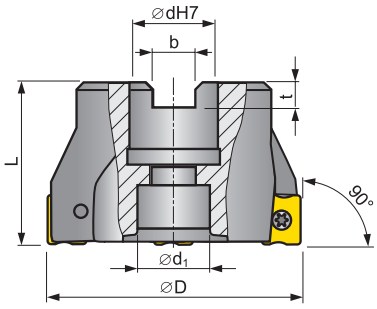

γ_p	-6°	κ_r	90°
γ_f	-14° – -15°	$a_{p\,max}$	9 mm

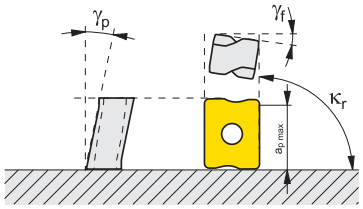

Z* - Anzahl Zähne / Number of teeth

Abmessungen [mm]. / Dimensions [mm].

ISO	Sortiment / Assortment	Abmessungen / Dimensions											Kühlung Cooling	[kg]
		D	dH7	d_1	L	b	t	Z*						
40A04R-S90LN12-C	●	40	16	14	40	8,4	5,6	4					+	0,2
50A04R-S90LN12-C	●	50	22	18	40	10,4	6,3	4					+	0,3
50A05R-S90LN12-C	●	50	22	18	40	10,4	6,3	5					+	0,3
63A04R-S90LN12-C	●	63	22	18	40	10,4	6,3	4					+	0,5
63A06R-S90LN12-C	●	63	22	18	40	10,4	6,3	6					+	0,5
80A05R-S90LN12-C	●	80	27	38	50	12,4	7,0	5					+	1,0
80A07R-S90LN12-C	●	80	27	38	50	12,4	7,0	7					+	1,0
100A06R-S90LN12-C	●	100	32	45	50	14,4	8,0	6					+	1,7
100A08R-S90LN12-C	●	100	32	45	50	14,4	8,0	8					+	1,7
110A06R-S90LN12-C	●	110	32	45	50	14,4	8,0	6					+	2,3

PRAMET

● Lagersortiment / ○ Kein Lagersortiment, ■ Lagersortiment ab 1.04.2014 / □ Kein Lagersortiment ab 1.04.2014
● stocked as standard / ○ not stocked as standard, ■ stocked as standard from 1.4.2014 / □ not stocked as standard from 1.4.2014
Derzeitiges Lagerbestandssortiment ist abhängig von der gültigen Preisliste. / See price list for current availability.