Dial Indicators

SERIES 1

1040S

1013S

1045S

1109S-10

Metric Stem ø 8mm M2.5 X 0.45 Thread

ISO/JIS type

Graduation	Range	Range / Rev	Dial reading	Order No. (W/Lug)	Order No. (Flat-back)	Accuracy: First 2.5 Rev	Accuracy: Overall Accuracy	Measuring force	Shockproof	Waterproof	Jeweled bearing
0.001mm	1mm	0.2mm	0-100-0	**1109S-10**	**1109SB-10**	±0.001mm	±0.007mm	1.5N or less	✔		✔
0.002mm	1mm	0.2mm	0-100-0	**1013S-10**	**1013SB-10**	±0.002mm	±0.01mm	1.5N or less	✔		✔
0.005mm	3.5mm	0.5mm	0-50	**1124S**	**1124SB**	±0.005mm	±0.013mm	1.4N or less			✔
0.01mm	3.5mm	0.5mm	0-50	**1040S**	**1040SB**	±0.01mm	±0.013mm	1.5N or less			
0.01mm	3.5mm	0.5mm	0-25-0	**1041S**	**1041SB**	±0.01mm	±0.013mm	1.5N or less			
0.01mm	4mm	1mm	0-50-0	**1003T**	**1003TB**	±0.01mm	±0.013mm	0.3 - 1.4N			
0.01mm	5mm	1mm	0-100	**1044S**	**1044SB**	±0.01mm	±0.013mm	1.5N or less			
0.01mm	5mm	1mm	0-100	**1044S-60**	**1044SB-60**	±0.01mm	±0.013mm	2N or less		✔	
0.01mm	5mm	1mm	0-100	**1044S-15**	**1044SB-15**	±0.01mm	±0.013mm	.4N or less	✔		
0.01mm	5mm	1mm	0-50-0	**1045S**	**1045SB**	±0.01mm	±0.013mm	1.4N or less			

Shockproof Waterproof Jeweled bearing

1003T

DIMENSIONS

Unit: mm

ISO/JIS Type

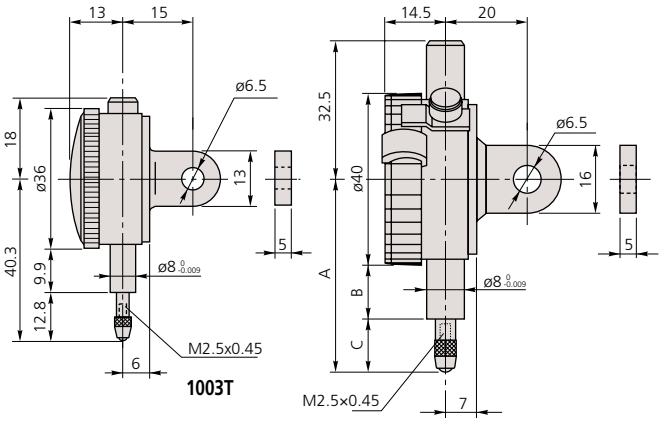

1003T

Order No.	A	B	C
1040S	46	13	12.5
1041S	46	13	12.5
1044S	47.5	13	14
1044S-10	47.5	13	14
1044S-60	57	11.5	25
1045S	47.5	13	14
1124S	46	13	12.5
1013S	49	13	15.5
1109S	49	13	15.5

1044S

Optional Accessories

———: Backs (See page F-33.)
———: Contact points (See page F-34.)