5 Port Mechanical Valve
Metal Seal
Series VFM200

Compact design, large flow capacity 18 mm²

High cycle rate, long life/300 c.p.m. or less

Piping possible to any EXH port.

Proper countermeasures can be taken for applications in which the noise of the exhaust could cause problems to the surroundings.

External pilot model available. (Option)

Foot bracket and manifold mounting possible.

Specifications

Fluid	Air/Inert gas
Operating pressure	0.1 to 1.0 MPa (1)
Ambient and fluid temperature	–5 to 60°C (No freezing)
Effective area	18 mm²
Maximum frequency (Mechanical operation type)	300 c.p.m. or less
Lubrication	Not required (Use turbine oil Class 1 ISO VG32, if lubricated.)
Port size	Main valve Rc 1/4
	Pilot valve (EXH)/M5 x 0.8
Option	Foot bracket (2)
Weight (Basic)	300 g

∗ Please contact SMC for manifold mounting style.
Note 1) External pilot type Main valve: 0 to 1.0 MPa
Pilot valve: 0.1 to 1.0 MPa
Note 2) The standard body can not be retrofitted with a foot bracket.

Model

	Actuator	Model	Actuator part no.	Application
Mechanical operation	Basic	**VFM250-02-00**	—	—
	Roller lever	**VFM250-02-01**	VM-01C	Polyacetal roller
		VFM250-02-01S	VM-01CS	Hard steel roller
	One way roller lever	**VFM250-02-02**	VM-02C	Polyacetal roller
		VFM250-02-02S	VM-02CS	Hard steel roller
	Straight plunger	**VFM250-02-05**	VM-05D	—
	Roller plunger	**VFM250-02-06**	VM-06D	Polyacetal roller
		VFM250-02-06S	VM-06DS	Hard steel roller
Manual operation	Toggle lever	**VFM250-02-08**	VM-08D	—
	Push button (Mushroom)	**VFM250-02-30R**	VM-30CR	Red
		VFM250-02-30B	VM-30CB	Black
		VFM250-02-30G	VM-30CG	Green
		VFM250-02-30Y	VM-30CY	Yellow
	Push button (Extended)	**VFM250-02-32R**	VM-32CR	Red
		VFM250-02-32B	VM-32CB	Black
		VFM250-02-32G	VM-32CG	Green
		VFM250-02-32Y	VM-32CY	Yellow
	Push button (Flush)	**VFM250-02-33**	VM-33C	With a set of red, black, green, yellow
	Twist selector (2 position)	**VFM250-02-34R**	VM-34CR	Red
		VFM250-02-34B	VM-34CB	Black
		VFM250-02-34G	VM-34CG	Green
		VFM250-02-34Y	VM-34CY	Yellow
	Key selector (2 position)	**VFM250-02-36**	VM-36C	—

Note 1) Actuator replacement is available for all types.
Note 2) For push button (mushroom), push button (extended), push button (flush) and a single unit of fastening ring, refer to pages 5-6-6 to 5-6-7. The other parts are not replaceable.
Note 3) The handle of the selector (2 position) cannot be removed or replaced alone.

How to Order

VFM25 0 – 02 – 01 S –

Body option

0	Internal pilot type
1	External pilot type

Port size

02	Rc 1/4

Actuator type

00	Basic
01	Roller lever
02	One way roller lever
05	Straight plunger
06	Roller plunger
08	Toggle lever
30	Push button (Mushroom)
32	Push button (Extended)
33	Push button (Flush)
34	Twist selector (2 position)
36	Key selector (2 position)

Suffix for actuator

S	Hard steel roller	
R	Red	Color of push button selector
B	Black	
G	Green	
Y	Yellow	

Option

F	Foot bracket (Only internal pilot)

Construction

Non-actuated **Actuated**

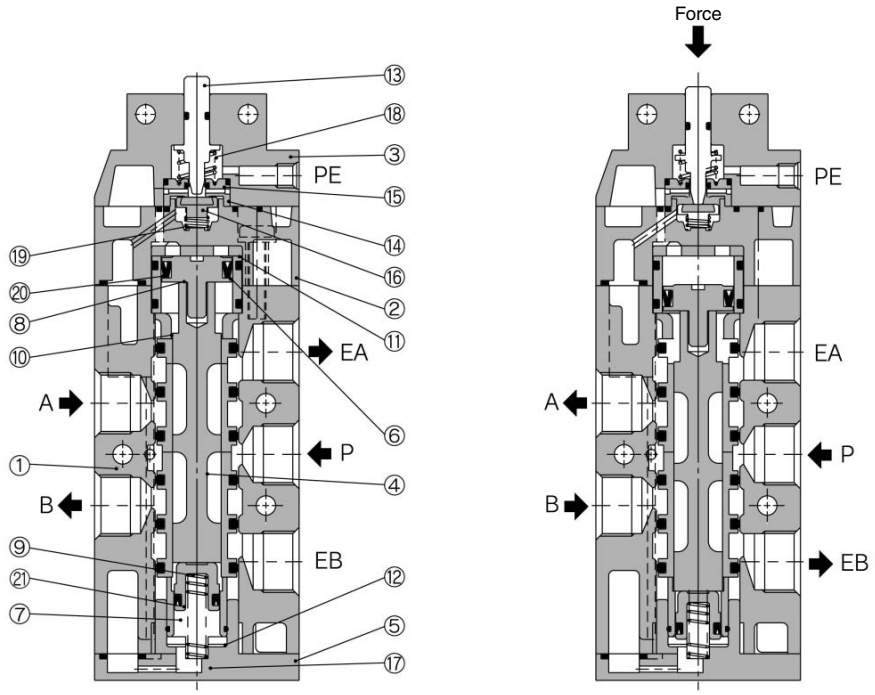

Component Parts

No.	Description	Material	Note
①	Body	ADC	Metallic plated
②	Pilot body	ZDC	Metallic plated
③	Head cover	ZDC	Black zinc chromated
④	Spool/sleeve	Stainless steel	
⑤	End cover	POM	
⑥	Piston guide	Brass	
⑦	Piston guide for end cover	Brass	
⑧	Piston	POM	
⑨	Piston for end cover	POM	
⑩	Guide bushing	POM	
⑪	Cushion	Urethane rubber	

No.	Description	Material	Note
⑫	Cushion for end cover	Urethane rubber	
⑬	Plunger	POM	
⑭	Valve seat (A)	POM	
⑮	Valve seat (B)	POM	
⑯	Valve	NBR	
⑰	Return spring	Stainless steel	
⑱	Return spring	Stainless steel	
⑲	Valve spring	Stainless steel	
⑳	Mini Y packing	NBR	
㉑	Mini Y packing	NBR	

Series VFM200

Straight plunger
VFM250-02-05

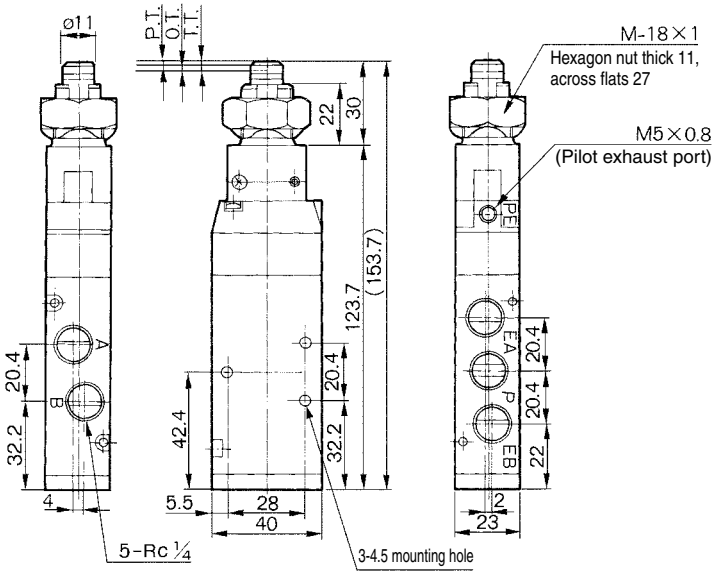

Panel mounting hole

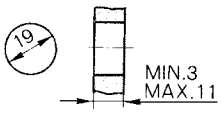

JIS Symbol

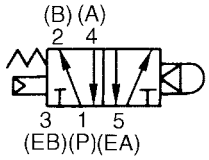

∗ 0.5 MPa supply

F.O.F. ∗	20 N
P.T.	1.5 mm
O.T.	2.0 mm
T.T.	3.5 mm

Roller plunge
VFM250-02-06
VFM250-02-06S

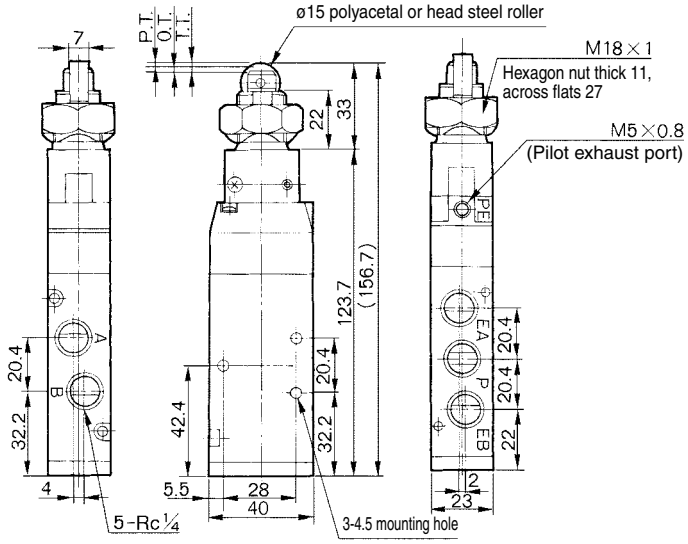

Panel mounting hole

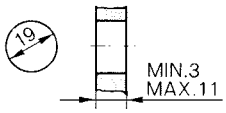

JIS symbol

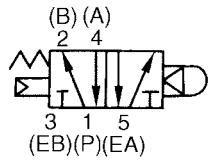

∗ 0.5 MPa supply

F.O.F. ∗	20 N
P.T.	1.5 mm
O.T.	2.0 mm
T.T.	3.5 mm

Toggle lever
VFM250-02-08

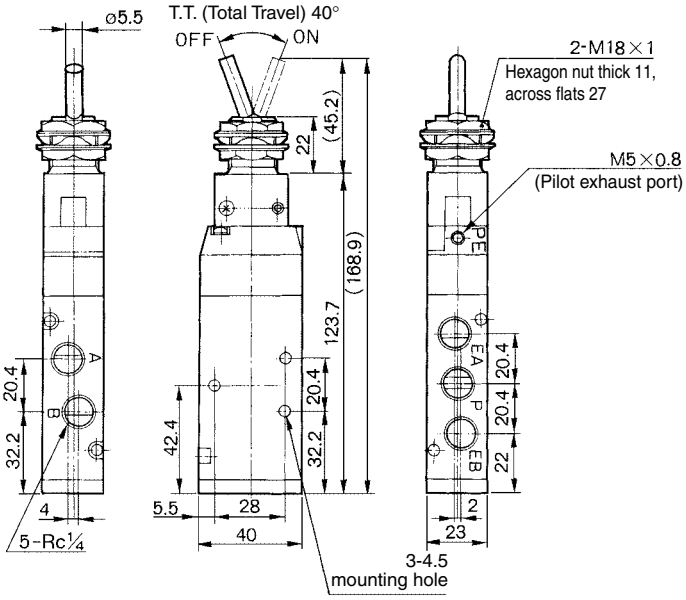

Panel mounting hole

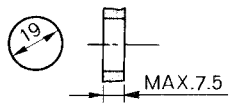

JIS symbol

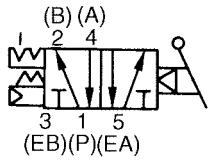

∗ 0.5 MPa supply

F.O.F. ∗	15 N
T.T.	40°