PDF technical sheet
6210HT200ZZ

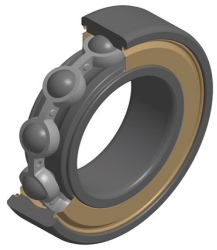

Single row deep groove ball bearings

TOPLINE deep groove ball bearing, radial contact, pressed steel cage, shields on both sides, applications upto 200℃.

Product definition	
d	50 mm
D	90 mm
B	20 mm
d1	59.60 mm
D1	80.80 mm
rs min	1.10 mm
Radial clearance class	C4
Mass	0.45 kg
Brand	SNR

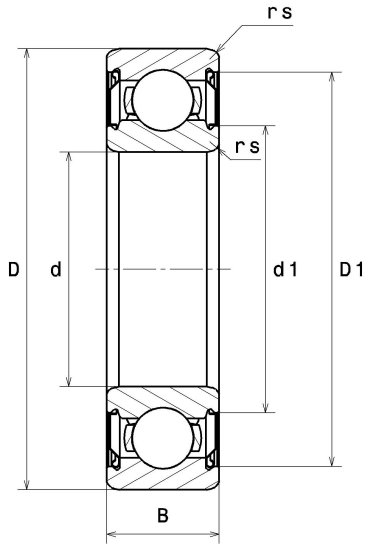

Product performance	
Dynamic load, C	34.50 kN
Static load, C0	23.20 kN
Fatigue limit load, Cu	1.05 kN
f0	14.4
Nref	8,200 Tr/min
Nlim	4,300 Tr/min
Min operating temperature, Tmin	−20 ℃
Max operating temperature, Tmax	200 ℃
Characteristic cage frequency, FTF	0.41 Hz
Characteristic rolling element frequency, BSF	5.33 Hz
Characteristic outer ring frequency, BPF0	4.09 Hz
Characteristic inner ring frequency, BPFI	5.91 Hz

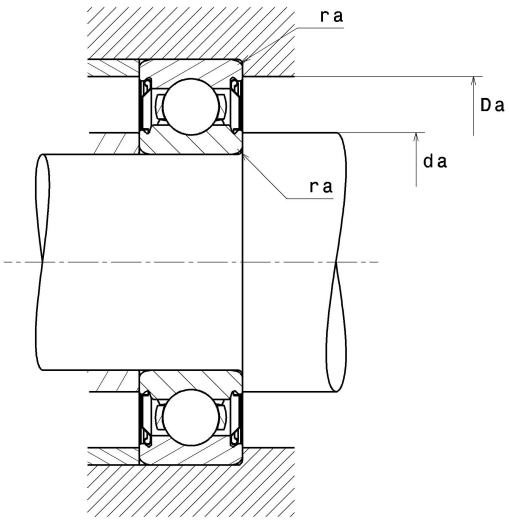

Abutment dimensions	
da min	56.50 mm
da max	59.60 mm
Da max	83.50 mm
ra max	1 mm

Calculation factors

Equivalent dynamic radial load

P = X.Fr + Y.Fa

$\frac{f_0 F_a}{C_0}$	e	Fa / Fr ≤ e		Fa / Fr > e	
		X	Y	X	Y
0.172	0.19	1	0	0.56	2.3
0.345	0.22				1.99
0.689	0.26				1.71
1.03	0.28				1.55
1.38	0.3				1.45
2.07	0.34				1.31
3.45	0.38				1.15
5.17	0.42				1.04
6.89	0.44				1

Equivalent static radial load

Po = Xo.Fr + Yo.Fa

X_0	Y_0
0.6	0.5

For single or DT bearing arrangement :

If Po <Fr, then use Po = Fr